MARELUX

Artemis 13000 Video Light

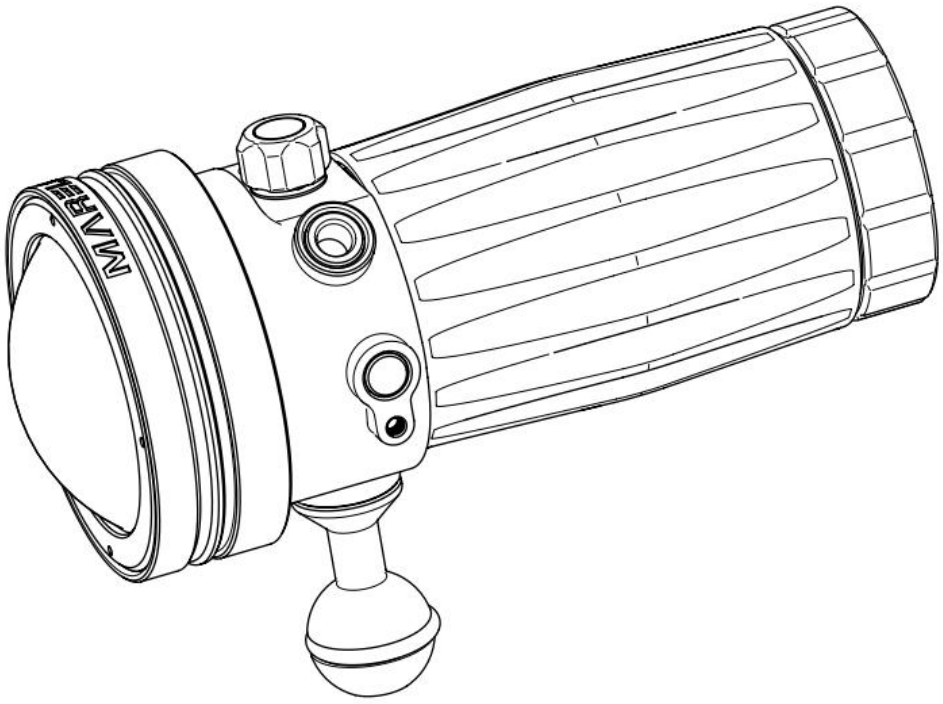

User Manual

Please read this user manual carefully before starting to use the product, and use the product properly based on the thorough understanding of this user manual.

https://www.marelux.co/

Product Features

Material:Anodized aluminum alloy main body with plastic battery chamber

Dimensions:Diameter 80mm, Length 170 mm

Weight in Air(including 4 x 21700 batteries):848g（A single 21700 battery cell weighs 68 grams）

Underwater weight (including 4 x 21700 batteries):280g (with ball mount)

Battery: 4 × 21700 lithium-ion batteries; required continuous discharge current > 10 A

Battery runtime: 50 minutes at full power (with 5000mAh 21700 lithium-ion battery)

Waterproof Depth:100m

Beam Angle:120°

TEMP: 5500K

Output:White light(100%) 13000 lumens(The rotary knob allows for stepless brightness adjustmen)

Allow 5 steps encrypted optical remote control on power level.

Color Rendering Index(CRI):96

Package Contents

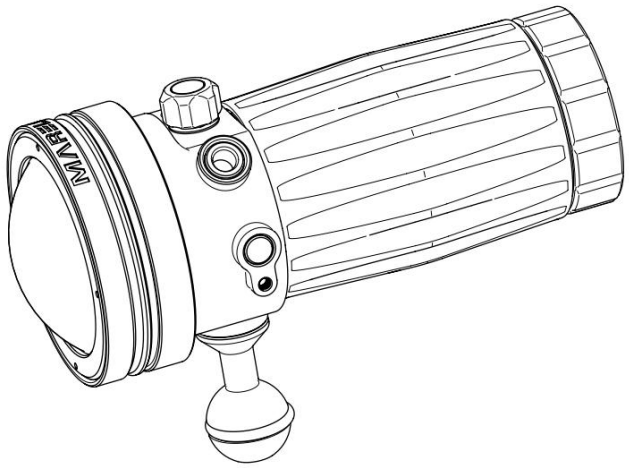

Artemis 13000 Video Light



Mounting Ball

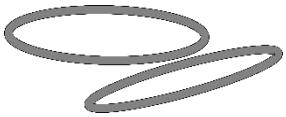

O-Ring*2

Parts Illustration

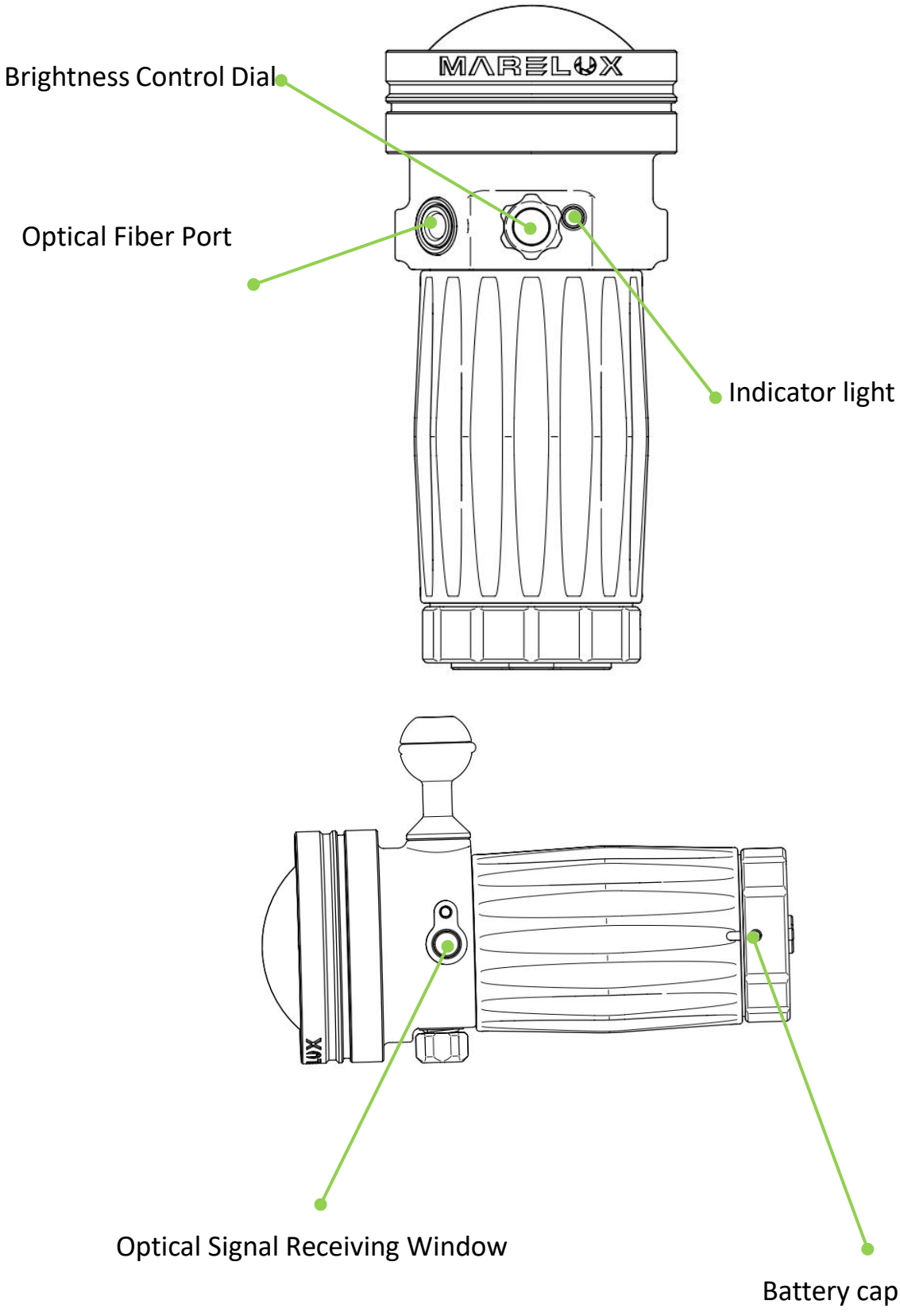

Battery Installation

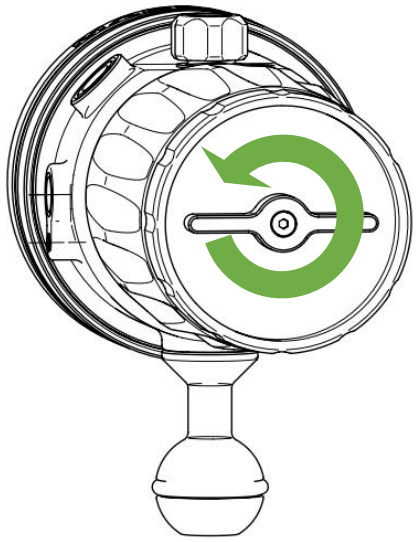

Rotate counterclockwise to remove the battery cap.

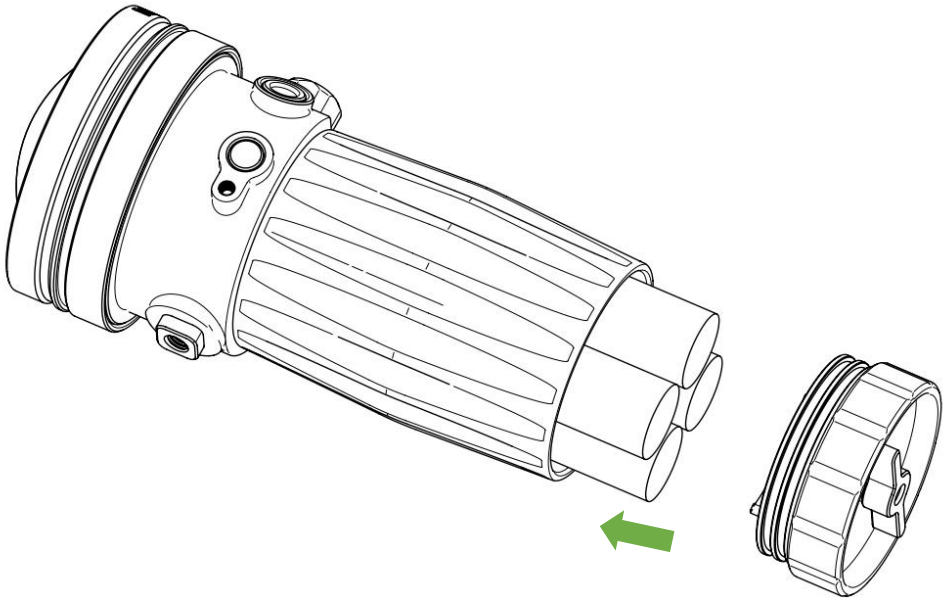

Insert batteries following the polarity marking inside the battery compartment.

Battery Installation

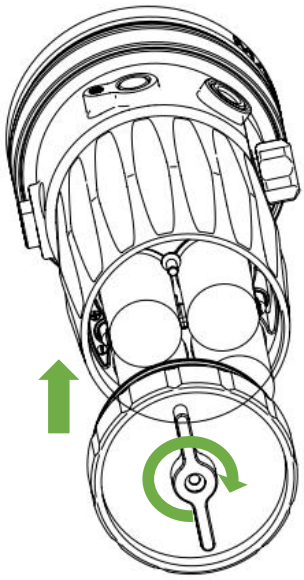

Align the silver marker on the battery cap to the silver marker on the battery compartment. Insert the battery cap and twist it clockwise until secured.

Mounting Ball Installation

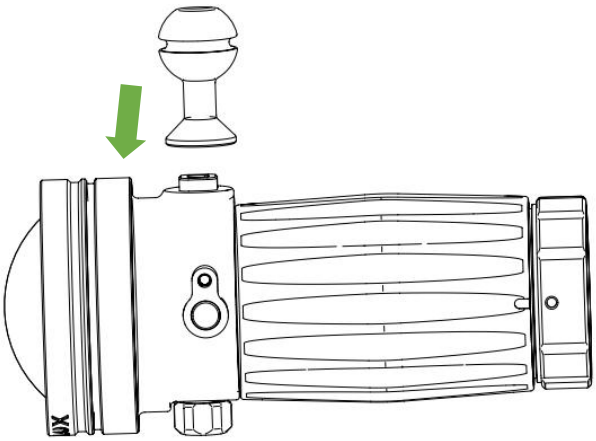

Fit washers onto the mounting ball, then screw into the threaded hole.

Operation

Press and hold the Brightness Control Dial to power on or power off.

Short-press the Brightness Control Dial to switch modes between manual brightness adjustment and wireless brightness adjustment.

In manual brightness adjustment mode, rotate the Brightness Control Dial to adjust the brightness of the video light.

The wireless brightness adjustment mode works with 42709V Artemis 4500RMT 2.0-V; the indicator light flashes continuously in this mode.

The Optical Fiber Port receives trigger signals. Upon receiving a trigger signal, the video light turns off briefly for 0.2 seconds.

Maintenance and Storage

1. After diving, make sure the Artemis 13000 Video Light is locked and sealed, wash the Artemis 13000 Video Light body with fresh water.
2. When immersed with fresh water, push each button few times, thus can help to let salt and sand out.
3. Use a soft cloth to wipe and clean the dome.
4. After each dive, clean the O-rings and check if there are damages on the O-rings.
5. Use sturdy and shock-proof case to carry the Artemis 13000 Video Light and its accessories.
6. Don’t leave the Artemis 13000 Video Light for too long inside vehicle under exposure to sunlight or heat.
7. Please stop charging the battery when it is full to prevent overcharging and damage to the battery.
8. If don’t use the Artemis 13000 Video Light for long period, remove the batteries.
9. This product is prohibited for use or play by children under 10 years old.

Warranty

1. Marelux provides 2 years warranty for its housing body, cable (such as fiber cable and HDMI cable), and 1 year warranty for electronic parts and components made of silicon, rubber and plastic.

2. Marelux will keep components and parts for repair and maintenance in storage for 5 years after EOL of each model. Beyond this period, Marelux may not be able to provide repair service for those products.

3. Repair caused by following reasons will still be charged by marelux even during the 2 years warranty.

   - Damage from misuse, incorrect maintenance or storage not complying with the specifications and notices in this users' manual；
   - Damage from falling or inappropriate placement of the product；
   - Damage caused by repair, maintenance, dismantlement, modification or cleaning by any unauthorized vendor or service center by Marelux;
   - Product without authentic Marelux serial number, or with erased, distorted or falsified serial number;
   - Damage caused by usage of non Marelux recommended accessories, parts, components from other makers or suppliers, such as Flash Trigger, Cable, Dome Port, Extension Ring, Convertor and etc；
   - Damage caused by misuse or mistreatment by human, or by natural disaster or other situations of force majeure;
   - Malfunction or damage caused by erosion due to not cleaning the housing or accessories.

4. Batteries, lubricants and other consumable supplies are not in warranty.
5. All parts and components replaced from the housing and its accessories in the warranty service should belong to Marelux.
6. Marelux is not responsible for and will not compensate any collateral damages or financial losses caused by using Marelux products, such as income or fees related to the users of Marelux products.

- Warranty is only provided to products sold inside the service territory of the distributor or reseller.
- Products purchased and used for rental business are not included in warranty.
- Products will lose warranty immediately after unauthorized repair or modification.
- The warranty terms above are made for Marelux customers to conduct free warranty service and repair and have no restriction to any legal rights that customers shall possess.